SEASHORE
3700 SERIES

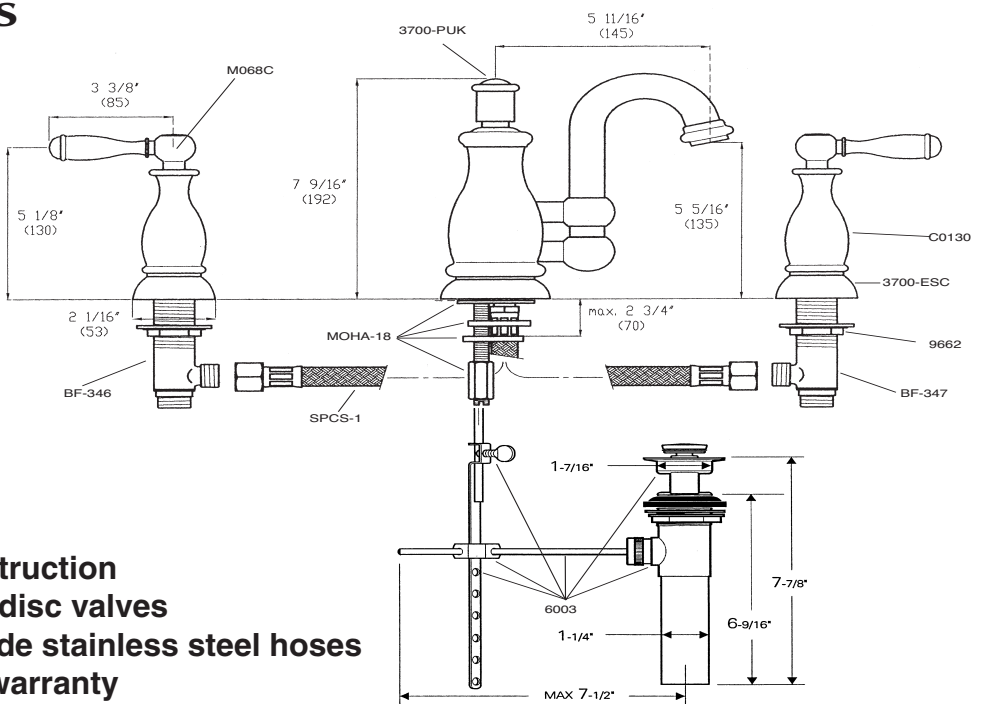

- **Solid brass construction**
- **1/4-turn ceramic disc valves**
- **Flexible high grade stainless steel hoses**
- **Limited lifetime warranty**
- **Finishes: cp/orb/sn/pn/mb**

Telephone: 312-243-0770 • Fax: 312-243-1661 • Toll-Free: 888-301-8787 • www.micodesigns.com